ACS PART NUMBER	G PILOT Ø	B REF BOLT CIRCLE Ø	F REF BOLT HOLE Ø	E # HOLES	NOTES	H DISK	PW	
890200	2.000/2.003	3.500	.406	6		10150002004635	3.340 MAX	D
89010X	1.002/1.004	—	—	—		10150001000000	3.340 MAX	C D
890256	2.562/2.565	3.500	.406	6	PILOT PER VIEW A	10150002564635	3.340 MAX	D
890500	5.001/5.004	6.000	.406	6		10150005004660	3.340 MAX	D
890300	3.002/3.005	5.250	.433	6		10150003004652	3.340 MAX	B D I
890369	3.687/3.690	4.630	.406	6		10150003694646	3.340 MAX	D
890100	1.002/1.004	1.970 2.360	.343 .406	4 4		10150001003419442 4	3.340 MAX	C D
890400	4.000/4.003	4.478	.228	8		10150004002845	3.340 MAX	E
890325	3.250/3.253	3.810	.406	4		10150003254438	3.340 MAX	F

SEE PILOT LISTING P/N 999999 FOR ADDITIONAL PILOTS (H)

NOTES:
1. MATERIAL: B3WG6 OR PA6GF30 NYLON 6 GLASS FILLED 30%
2. BALANCE TO .4 OZ/IN. BALANCE TO BE ACHIEVED BY MATERIAL REMOVAL AT BLADE TIP UP TO .3 INCHES ON 4 BLADES OR BY ADDITION OF BALANCE WEIGHTS ON HUB RIBS.
(J) 3. A DASH NUMBER WILL BE INCLUDED DESIGNATING FAN DIAMETER (OD). EX. 890500-38 (INCHES) OR 890500-965 (MM). THE MAX REFEERENCE FAN DIA IS 38 INCHES. THE DIA TOLERANCE ON MOLDED FAN DIAMETERS IS +.150/-.236. THE DIA TOLERANCE ON CUT DIAMETERS IS +0/-.236.
(L) THE MAXIMUM CUT DIA IS 955 MM (37.6 IN). BEYOND 955 THE FAN DIAMETER IS THE AS MOLDED DIAMETER OF 38 INCHES (965.2 MM).
4. PW IS DEFINED AS THE MAXIMUM MEASUREMENT FRONT TO BACK.
5. MARK PART WITH ACS LOGO AND PART NUMBER AS SHOWN.

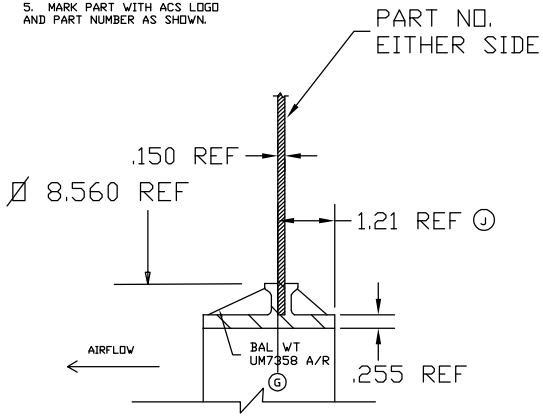

SECTION Z-Z
HALF SIZE

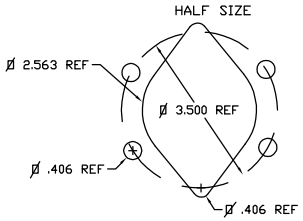

VIEW A
HALF SIZE

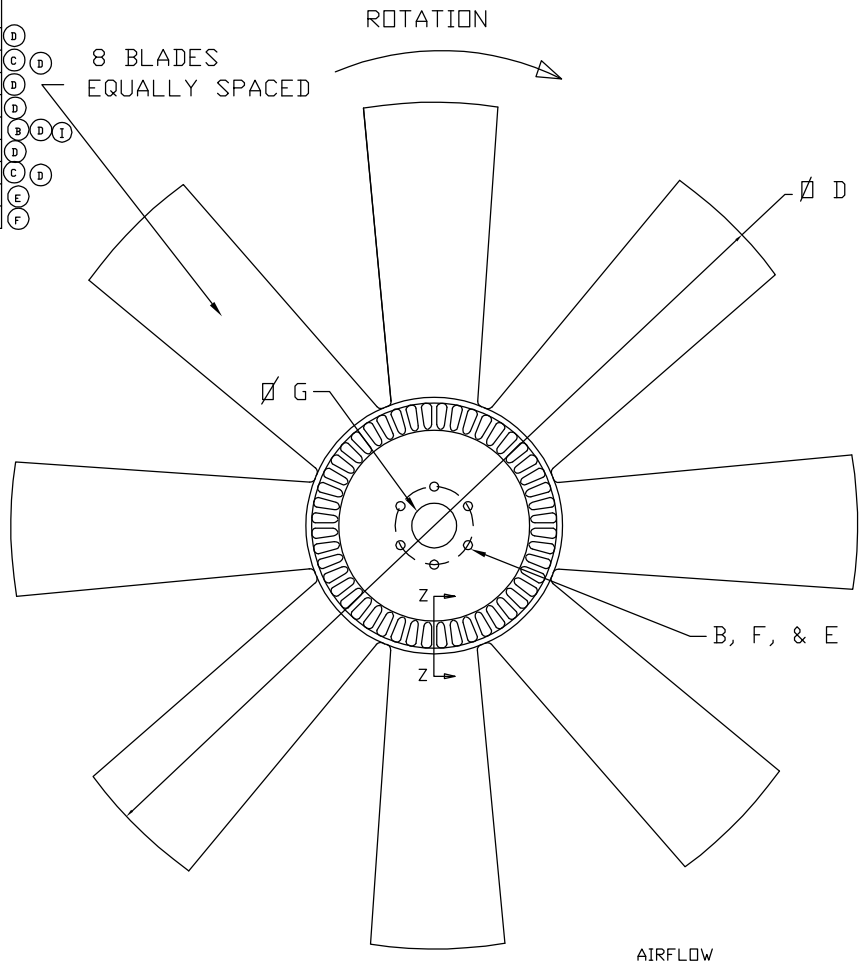

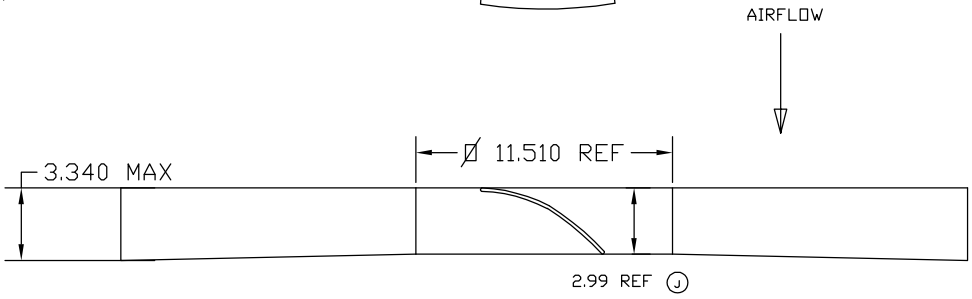

NOTE: BLADES REMOVED FOR CLARITY

SYM	ECN	REVISION	DK'D	DATE
L	0084	ADD DIM CLARIFICATION TO NOTE 4	GFS	23NOV16
K	0046	CORRECT DWG	GFS	20DEC05
J	0045	MODIFY NOTE 3 AND ADD REF DIMS	GFS	24OCT05
I	0030	COR BOLT CIRCLE AND DISK CALL OUT	GFS	25APR03
H	0019	ADD NOTE ON PILOTS	GFS	22MAR02
G	0018	ADD BALANCE WEIGHT P/N TO PRINT	GFS	20FEB02
F	0015	ADD 3.25 PILOT	GFS	15 MAR01
E	0012	ADD 4.0 PILOT	GFS	01SEP00
D	0010	CORRECT DWG DIMENSIONS	GFS	16JUN00
C	0006	CHGD AND ADDED 1.0 PILOT, COR DWG	GFS	29FEB00
B	0007	CHANGED TO 3.002/3.005 PILOT	GFS	29FEB00
A	00002	RELEASED	GFS	14APR99

AMERICAN COOLING SYSTEMS

PART NAME: FAN ASSEMBLY - 890

DRAWN	GFS		APPROVED
DATE	14APR99	SCALE	1/4
MATERIAL	NOTED	ENG'NG	G. SPRINGMAN
SHRINK	.05 IN/IN	QC	
FINISH	NOTED	MFG	

THIS DRAWING HAS BEEN PREPARED IN ACCORDANCE WITH ASME Y14.5M-1994

TOL. UNLESS SPECIFIED
.XXX +/- 0.03
.XX +/- 0.05
.X +/- 0.07
∠ +/- 1°

CUSTOMER

CUSTOMER PART NO.

ACS PART NO. 890XXX