ACS PART NUMBER	G PILOT Ø	B REF BOLT CIRCLE Ø	F REF BOLT HOLE Ø	E # HOLES	NOTES	H DISK	PW (C)
828200	2.000/2.003	3.500	.406	6		10150292004635	2.927 MAX
82810X	1.002/1.004	—	—	—		10150291000000	2.927 MAX
828256	2.562/2.565	3.500	.406	6	PILOT PER VIEW A	10150292564635	2.927 MAX
828500	5.001/5.004	6.000	.406	6		10150295004660	2.927 MAX
828300	3.002/3.005	5.250	.433	6		10150293004652	2.927 MAX (G)
828369	3.687/3.690	4.630	.406	6		10150293694646	2.927 MAX
828100	1.002/1.004	1.970 2.360	.343 .406	4 4	SEE DETAIL 'X'	101502910034194424	2.927 MAX
828400	4.000/4.003	4.478	.228	8		10150294002845	2.927 MAX (B)
828325	3.250/3.253	3.810	.406	4		10150293254438	2.927 MAX (D)

SEE PILOT LISTING P/N 999999 FOR ADDITIONAL PILOTS (F)

NOTES:
1. MATERIAL: B3WG6 OR PA6GF30
NYLON 6 GLASS FILLED 30%
2. BALANCE TO .4 OZ/IN. BALANCE TO BE
ACHIEVED BY MATERIAL REMOVAL AT
BLADE TIP UP TO .3 INCHES ON
4 BLADES OR BY ADDITION OF BALANCE
WEIGHTS ON HUB RIBS.
(H) 3. A DASH NUMBER WILL BE INCLUDED
DESIGNATING FAN DIAMETER (OD).
EX. 828500-36 (INCHES)
OR 828500-914 (MM).
THE MAX REFEERENCE FAN DIA IS 36 INCHES.
THE DIA TOLERANCE ON MOLDED FAN DIAMETERS IS +.150/-.236.
THE DIA TOLERANCE ON CUT DIAMETERS IS +0/-.236.
4. PW IS DEFINED AS THE MAXIMUM
MEASUREMENT FRONT TO BACK.

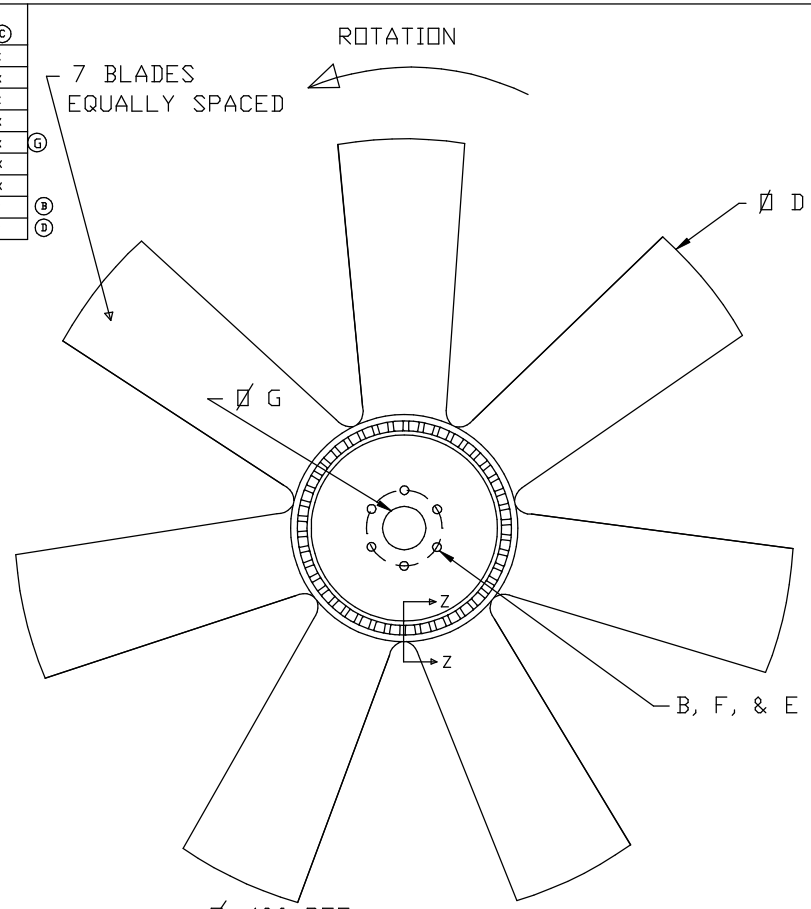

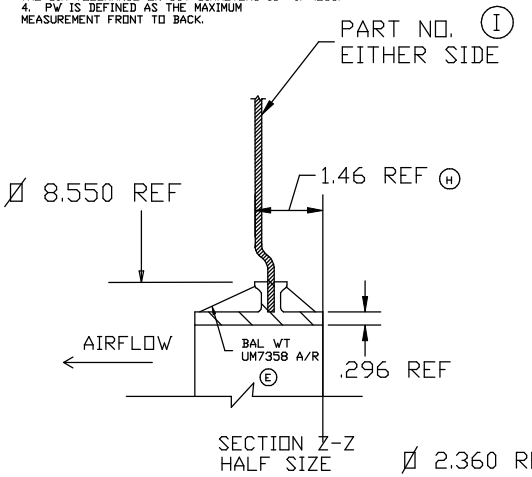

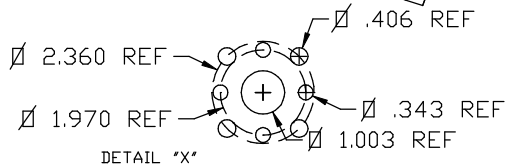

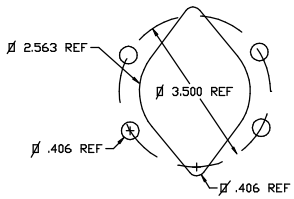

VIEW A
HALF SIZE

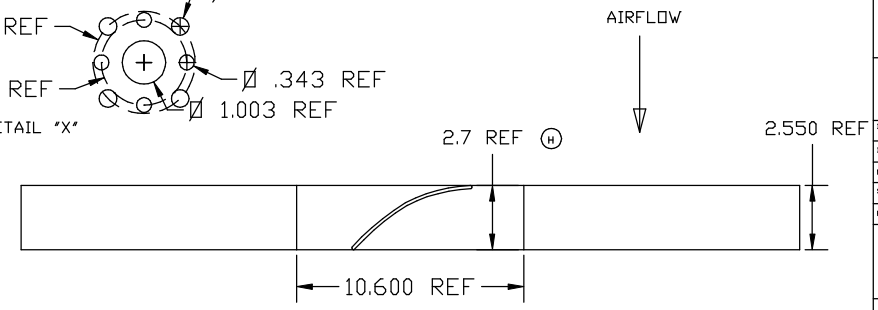

NOTE: BLADES REMOVED FOR CLARITY

SYM	ECN	REVISION	DK'D	DATE
I	0046	CORRECT DWG	GFS	20DEC05
H	0045	MODIFY NOTE 3 AND ADD REF DIMS	GFS	24OCT05
G	0030	COR BOLT CIRCLE DIA AND DISK CALL OUT	GFS	25APR03
F	0019	ADD NOTE ON PILOTS	GFS	21MAR02
E	0018	ADD BALANCE WEIGHT P/N TO PRINT	GFS	20FEB02
D	0015	ADD 3.25 PILOT	GFS	15MAR01
C	0013	COR DIMENSIONS	GFS	06OCT00
B	0012	ADD 4.0 PILOT	GFS	01SEP00
A	0008	RELEASED	GFS	14MAR00

AMERICAN COOLING SYSTEMS

PART NAME
FAN ASSEMBLY - 828

DRAWN	GFS	APPROVED	
DATE	29DEC99	SCALE	1/4
MATERIAL	NOTED	ENG'RNG	G. SPRINGMAN
SHRINK	.05 IN/IN	QC	
FINISH	NOTED	MFG	

THIS DRAWING HAS BEEN PREPARED IN ACCORDANCE WITH ASME Y14.5M-1994

CUSTOMER

CUSTOMER PART NO.

TOL. UNLESS SPECIFIED
.XXX +/- 0.03
.XX +/- 0.05
.X +/- 0.07
∠ +/- 1°

ACS PART NO. 828XXX