| ACS PART NUMBER | G PILOT Ø | B REF BOLT CIRCLE Ø | F REF BOLT HOLE Ø | E # HOLES | NOTES | H DISK | PW | |
|---|---|---|---|---|---|---|---|---|
| 449200 | 2.000/2.003 | 3.500 | .406 | 6 | | 7150002004635 | 2.500 MAX | C |
| 449100 | 1.002/1.004 | 1.970<br>2.360 | .343<br>.406 | 4<br>4 | PILOT PER DETAIL X | 7150001003419442 4 | 2.500 MAX | C |
| 449256 | 2.562/2.565 | 3.500 | .406 | 6 | PILOT PER DETAIL Y | 7150002564635 | 2.500 MAX | C |
| 449325 | 3.250/3.253 | 3.810 | .343 | 4 | | 7150003253438 | 2.500 MAX | C |
| 449161 | 1.614/1.617 | 2.500 | .343 | 4 | | 7150001613425 | 2.500 MAX | C |
| 44910X | 1.002/1.004 | — | — | — | | 7150001000000 | 2.500 MAX | C |
| 449400 | 4.00/4.003 | 4.478 | .228 | 8 | | 7150004002845 | 2.500 MAX | D |

SEE PILOT LISTING P/N 999999 FOR ADDITIONAL PILOTS (F)

NOTES:
1. MATERIAL: B3WG6 OR PA6GF30
NYLON 6 GLASS FILLED 30%
2. BALANCE TO .4 OZ-IN. BALANCE TO BE ACHIEVED BY MATERIAL REMOVAL AT BLADE TIP UP TO .3 INCHES ON 4 BLADES OR BY ADDITION OF BALANCE WEIGHTS ON HUB RIBS.
(G) 3. A DASH NUMBER WILL BE INCLUDED DESIGNATING FAN DIAMETER (DD).
EX. 449200-24 (INCHES)
OR 449200-610 (MM).
THE MAX REFEERENCE FAN DIA IS 24 INCHES.
THE DIA TOLERANCE ON MOLDED FAN DIAMETERS IS +.150/-.236.
THE DIA TOLERANCE ON CUT DIAMETERS IS +0/-.236.
4. PW IS DEFINED AS THE MAXIMUM MEASUREMENT FRONT TO BACK.

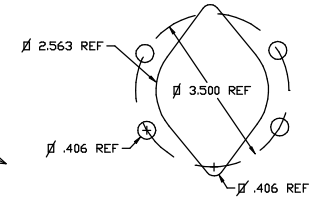


DETAIL "Y"
FOR ACS # 449256

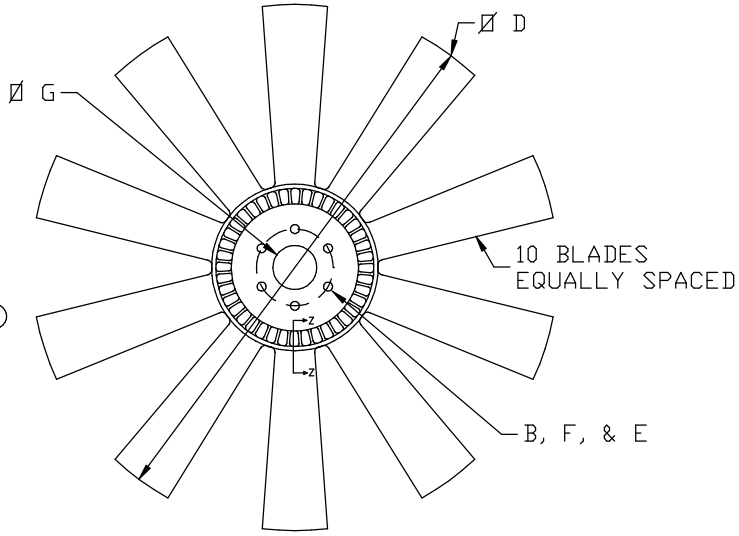


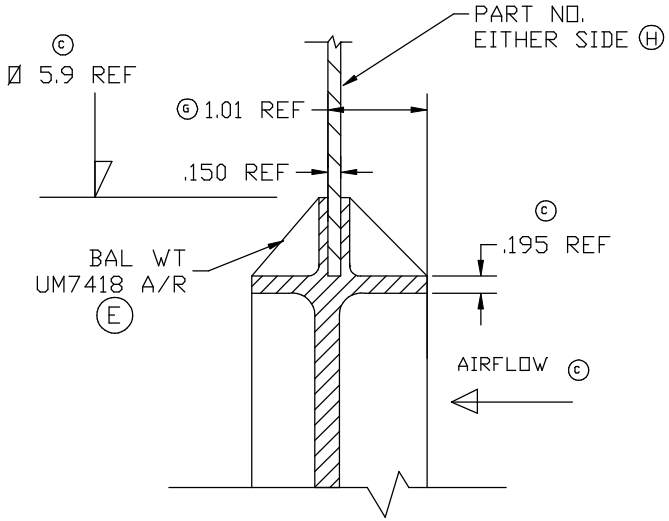


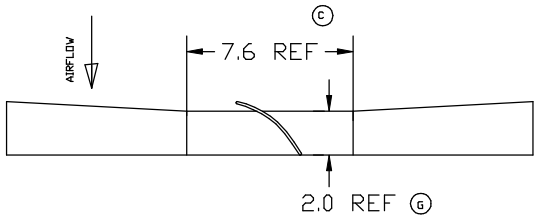


NOTE: BLADES REMOVED FOR CLARITY

SECTION Z-Z
FULL SIZE

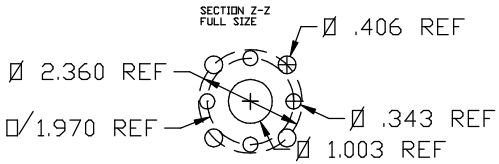


DETAIL "X"
FOR ACS # 449100

| SYM | ECN | REVISION | DK'D | DATE |
|---|---|---|---|---|
| H | 0046 | CORRECT DWG | GFS | 20DEC05 |
| G | 0045 | MODIFY NOTE 3 AND ADD REF DIMS | GFS | 24OCT05 |
| F | 0019 | ADD NOTE ON PILOTS | GFS | 21MAR02 |
| E | 0018 | ADD BAL WT P/N | GFS | 20FEB02 |
| D | 0012 | ADD 4.0 PILOT | GFS | 01SEP00 |
| C | 0006 | ADD 1.0 PILOT W/NO BOLT HOLES, COR DWG | GFS | 29FEB00 |
| B | 00001 | CORRECT NOTE 3. REDRAWN FOR AUTOCAD | GFS | 04APR99 |
| - | - | COR DIM 5.800+\-.025 WAS 6.800+\-.025 | - | - |
| A | - | RELEASED | TD | 29MAY98 |

AMERICAN COOLING SYSTEMS

PART NAME
FAN ASSEMBLY - 449

| | | | |
|---|---|---|---|
| DRAWN | RDB | APPROVED | |
| DATE | 23SEP97 | SCALE | 1/4 |
| MATERIAL | NOTED | ENG'NG | G. SPRINGMAN |
| SHRINK | .05 IN/IN | QC | |
| FINISH | NOTED | MFG | |

THIS DRAWING HAS BEEN PREPARED IN ACCORDANCE WITH ASME Y14.5M-1994

TOL. UNLESS SPECIFIED
XXX +/- 0.03
XX +/- 0.05
X +/- 0.07
< +/- 1°

CUSTOMER

CUSTOMER PART NO.

ACS PART NO. 449XXX