ACS PART NUMBER	G PILOT Ø	B REF BOLT CIRCLE Ø	F REF HOLE Ø	E # HOLES	NOTES	H DISK	PW	
443200	2.000/2.003	3.500	.406	6		10150752004635	3.788 MAX	G
44310X	1.002/1.004	—	—	—		10150751000000	3.788 MAX	C G
443256	2.562/2.565	3.500	.406	6	PILOT PER VIEW A	10150752564635	3.788 MAX	G
443500	5.001/5.004	6.000	.406	6		10150755004660	3.788 MAX	G
443369	3.687/3.690	4.630	.406	6		10150753694646	3.788 MAX	G
443300	3.002/3.005	5.250	.433	6		10150753004652	3.788 MAX	B G
443325	3.250/3.253	3.810	.406	4		10150753254438	3.788 MAX	G
443161	1.614/1.617	2.500	.343	4		10150751613425	3.788 MAX	C G
443100	1.002/1.004	1.970 2.360	.343 .406	4 4		1015075100341944 24	3.788 MAX	C G
443400	4.000/4.003	4.478	.228	8		10150754002845	3.788 MAX	D G

SEE PILOT LISTING P/N 999999 FOR ADDITIONAL PILOTS (F)

NOTES:
1. MATERIAL: B3WG6 OR PA6GF30 NYLON 6 GLASS FILLED 30%
2. BALANCE TO .4 OZ/IN. BALANCE TO BE ACHIEVED BY MATERIAL REMOVAL AT BLADE TIP UP TO .3 INCHES ON 4 BLADES OR BY ADDITION OF BALANCE WEIGHTS ON HUB RIBS.
(H) 3. A DASH NUMBER WILL BE INCLUDED DESIGNATING FAN DIAMETER (ØD). EX. 443500-32 (INCHES) OR 443500-813 (MM). THE MAX REFEERENCE FAN DIA IS 32 INCHES. THE DIA TOLERANCE ON MOLDED FAN DIAMETERS IS +.150/-.236. THE DIA TOLERANCE ON CUT DIAMETERS IS +0/-.236.
4. PW IS DEFINED AS THE MAXIMUM MEASUREMENT FRONT TO BACK.

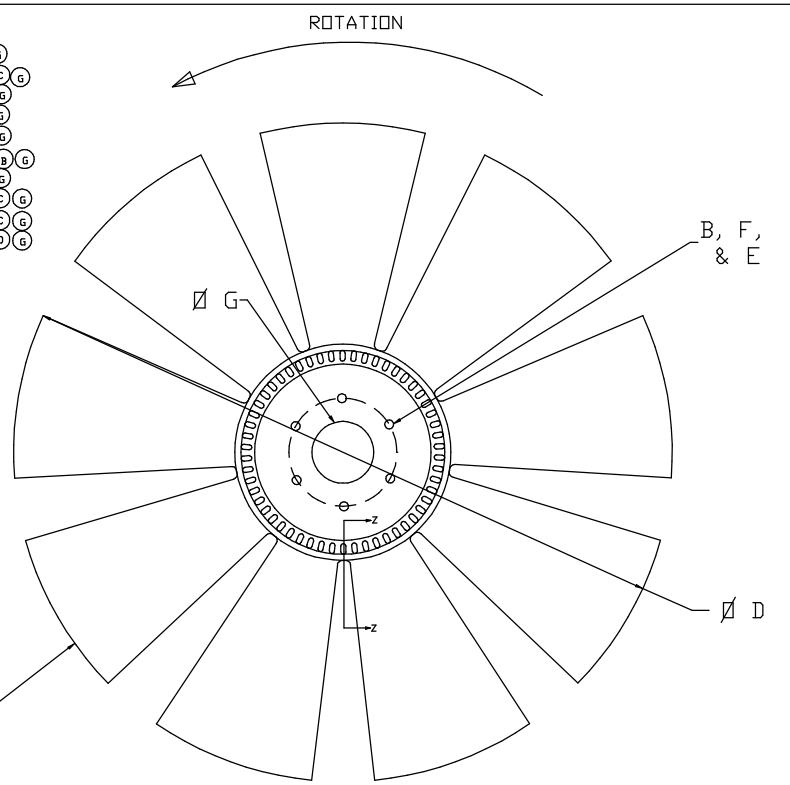

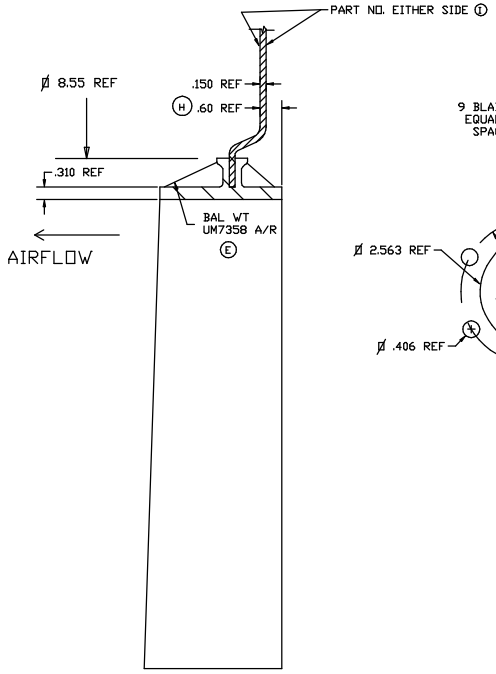

SECTION Z-Z
HALF SIZE

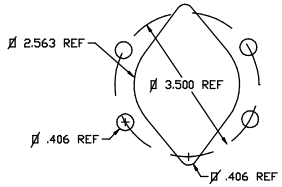

VIEW A

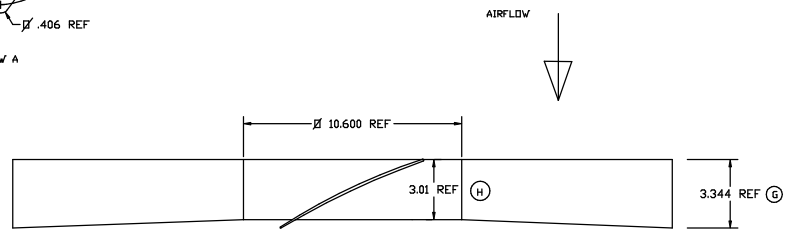

NOTE: BLADES REMOVED FOR CLARITY

SYM	ECN	REVISION	DK'D	DATE
I	0046	CORRECT DWG	GFS	20DEC05
H	0045	MODIFY NOTE 3 AND ADD REF DIMS	GFS	24OCT05
G	0040	CORRECT PW	GFS	30SEP04
F	0019	ADD NOTE ON PILOTS	GFS	19MAR02
E	0018	ADD BALANCE WEIGHT P/N TO PRINT	GFS	20FEB02
D	0012	ADD 4.0 PILOT	GFS	01SEP00
C	0006	CHGD AND ADDED 1.0 PILOT, COR DWG	GFS	29FEB00
B	0007	CHANGED TO 3.002/3.005 PILOT	GFS	29FEB00
A	0003	RELEASED	GFS	11NOV99

AMERICAN COOLING SYSTEMS

PART NAME
FAN ASSEMBLY - 443

DRAWN	GFS		APPROVED
DATE	10MAY99	SCALE	1/4
MATERIAL	NOTED	ENGNG	G. SPRINGMAN
SHRINK	.05 IN/IN	QC	
FINISH	NOTED	MFG	

THIS DRAWING HAS BEEN PREPARED IN ACCORDANCE WITH ASME Y14.5M-1994

TOL. UNLESS SPECIFIED
.XXX +/- .010
.XX +/- .025
.X +/- .047
∠ +/- 1°

CUSTOMER

CUSTOMER PART NO.

ACS PART NO.
443XXX