ACS PART NUMBER	G PILOT ⌀	B REF BOLT CIRCLE ⌀	F REF HOLE HOLE ⌀	E # HOLES	NOTES	H DISK	PW	
441200	2.000/2.003	3.500	.406	6		10150752004635	3.788 MAX	I
44110X	1.002/1.004	—	—	—		10150751000000	3.788 MAX	C I
441256	2.562/2.565	3.500	.406	6	PILOT PER VIEW A	10150752564635	3.788 MAX	I
441500	5.001/5.004	6.000	.406	6		10150755004660	3.788 MAX	I
441369	3.687/3.690	4.630	.406	6		10150753694646	3.788 MAX	I
441300	3.002/3.005	5.250	.433	6		10150753004652	3.788 MAX	B I
441325	3.250/3.253	3.810	.406	4		10150753254438	3.788 MAX	I
441161	1.614/1.617	2.500	.343	4		10150751613425	3.788 MAX	C I
441100	1.002/1.004	1.970 2.360	.343 .406	4 4		101507510034194424	3.788 MAX	C I
441400	4.00/4.003	4.478	.228	8		10150754002845	3.788 MAX	D I
44125A	2.562/2.565	3.500	.406	6		101507525A4635	3.788 MAX	E I

SEE PILOT LISTING P/N 999999 FOR ADDITIONAL PILOTS G

NOTES:
1. MATERIAL: B3WG6 OR PA6GF30
NYLON 6 GLASS FILLED 30%
2. BALANCE TO .4 OZ/IN. BALANCE TO BE
ACHIEVED BY MATERIAL REMOVAL AT
BLADE TIP UP TO .3 INCHES ON
4 BLADES OR BY ADDITION OF BALANCE
WEIGHTS ON HUB RIBS.
J 3. A DASH NUMBER WILL BE INCLUDED
DESIGNATING FAN DIAMETER (ØID).
EX. 441500-32 (INCHES)
OR 441500-813 (MM).
THE MAX REFEERENCE FAN DIA IS 32 INCHES.
THE DIA TOLERANCE ON MOLDED FAN DIAMETERS IS +.150/-.236.
THE DIA TOLERANCE ON CUT DIAMETERS IS +0/-.236.
4. PW IS DEFINED AS THE MAXIMUM
MEASUREMENT FRONT TO BACK.

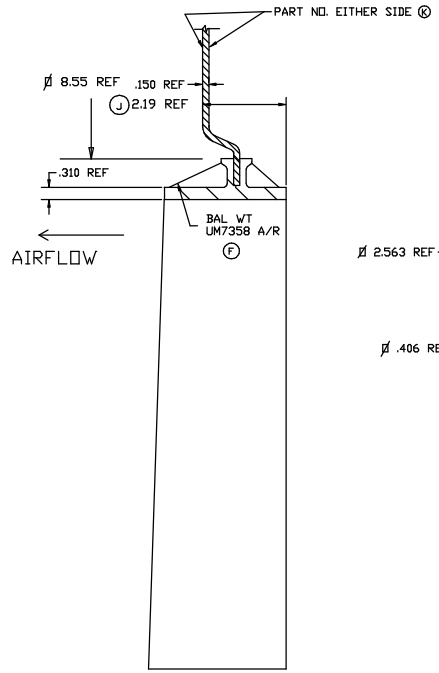

SECTION Z-Z
HALF SIZE

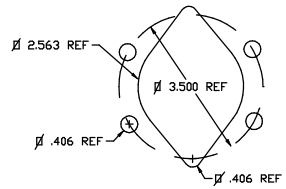

VIEW A

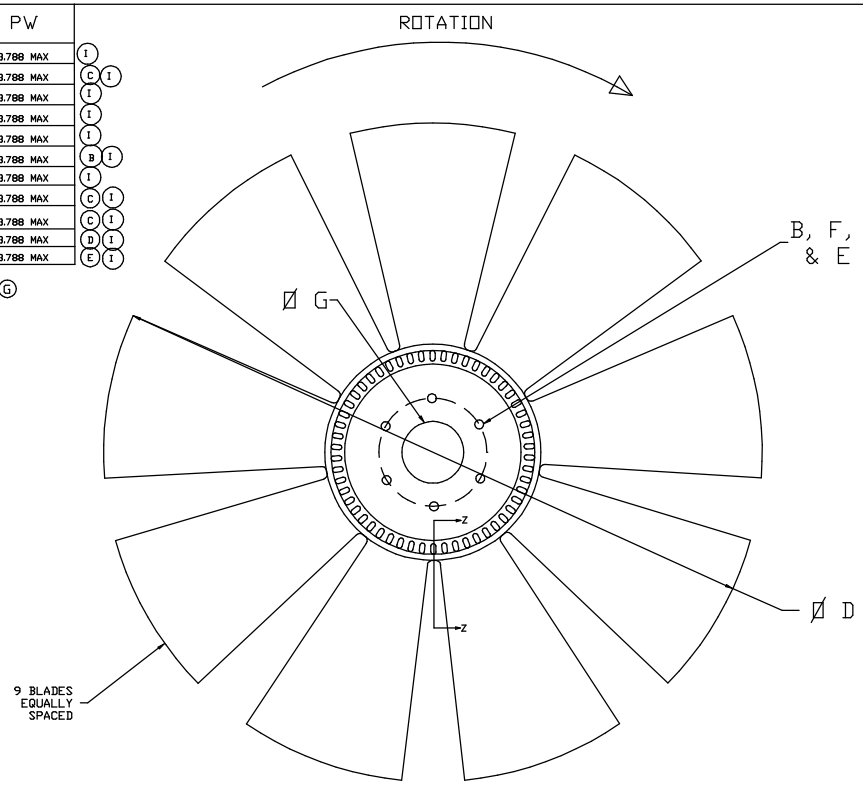

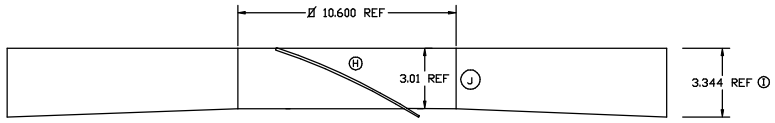

NOTE: BLADES REMOVED FOR CLARITY

SYM	ECN	REVISION	DK'D	DATE
K	0046	CORRECT DWG	GFS	20DEC05
J	0045	MODIFY NOTE 3 AND ADD REF DIMS	GFS	24OCT05
I	0040	CORRECT PW	GFS	30SEP04
H	0029	CORRECT VIEW	GFS	28JAN03
G	0019	ADD NOTE ON PILOTS	GFS	19MAR02
F	0018	ADD BALANCE WEIGHT P/N TO PRINT	GFS	20FEB02
E	0016	ADD 2.5A PILOT	GFS	22MAR01
D	0012	ADD 4.0 PILOT	GFS	01SEP00
C	0006	CHGD AND ADDED 1.0 PILOT, COR DWG	GFS	29FEB00
B	0007	CHANGED TO 3.002/3.005 PILOT	GFS	29FEB00
A	0003	RELEASED	GFS	11NOV99

AMERICAN COOLING SYSTEMS

PART NAME
FAN ASSEMBLY - 441

DRAWN	GFS		APPROVED
DATE	10MAY99	SCALE	1/4
MATERIAL	NOTED	ENGING	G. SPRINGMAN
SHRINK	.05 IN/IN	QC	
FINISH	NOTED	MFG	

THIS DRAWING HAS BEEN PREPARED IN ACCORDANCE WITH ASME Y14.5M-1994

CUSTOMER

CUSTOMER PART NO.

TOL. UNLESS SPECIFIED
.XXX +/- 0.03
.XX +/- 0.05
.X +/- 0.07
∠ +/- 1°

ACS PART NO.
441XXX