| ACS PART NUMBER | G PILOT ⌀ | B REF BOLT CIRCLE ⌀ | F REF BOLT HOLE ⌀ | E # HOLES | NOTES | H DISK | PW | |
|---|---|---|---|---|---|---|---|---|
| 440200 | 2.000/2.003 | 3.500 | .406 | 6 | | 101500020004635 | 3.788 MAX | D |
| 44010X | 1.002/1.004 | — | — | — | | 10150001000000 | 3.788 MAX | C D |
| 440256 | 2.562/2.565 | 3.500 | .406 | 6 | PILOT PER VIEW A | 10150002564635 | 3.788 MAX | D |
| 440500 | 5.001/5.004 | 6.000 | .406 | 6 | | 101500005004660 | 3.788 MAX | D |
| 440369 | 3.687/3.690 | 4.630 | .406 | 6 | | 10150003694646 | 3.788 MAX | D |
| 440300 | 3.002/3.005 | 5.250 | .433 | 6 | | 10150003004652 | 3.788 MAX | B D |
| 440325 | 3.250/3.253 | 3.810 | .406 | 4 | | 10150003254438 | 3.788 MAX | D |
| 440161 | 1.614/1.617 | 2.500 | .343 | 4 | | 10150001613425 | 3.788 MAX | C D |
| 440100 | 1.002/1.004 | 1.970<br>2.360 | .343<br>.406 | 4<br>4 | | 101500010034194424 | 3.788 MAX | C D |
| 440400 | 4.000/4.003 | 4.478 | .228 | 8 | | 10150004002845 | 3.788 MAX | E |
| 440256A | 2.562/2.565 | 3.500 | .406 | 6 | | 101500025A4635 | 3.788 MAX | F |

SEE PILOT LISTING P/N 999999 FOR ADDITIONAL PILOTS (H)

NOTES:
1. MATERIAL: B3WG6 OR PA6GF30
NYLON 6 GLASS FILLED 30%
2. BALANCE TO .4 OZ/IN. BALANCE TO BE ACHIEVED BY MATERIAL REMOVAL AT BLADE TIP UP TO .3 INCHES ON 4 BLADES OR BY ADDITION OF BALANCE WEIGHTS ON HUB RIBS.
(J) 3. A DASH NUMBER WILL BE INCLUDED DESIGNATING FAN DIAMETER (ØID).
EX. 440500-32 (INCHES)
OR 440500-813 (MM).
THE MAX REFEERENCE FAN DIA IS 32 INCHES.
THE DIA TOLERANCE ON MOLDED FAN DIAMETERS IS +.150/-.236.
THE DIA TOLERANCE ON CUT DIAMETERS IS +0/-.236.
4. PW IS DEFINED AS THE MAXIMUM MEASUREMENT FRONT TO BACK.
5. PILOT AND BOLT MAY BE MACHINED AFTER FAN MANUFACTURE. BARE METAL WILL BE RECOATED WITH ANTI-RUST BLACK PAINT.

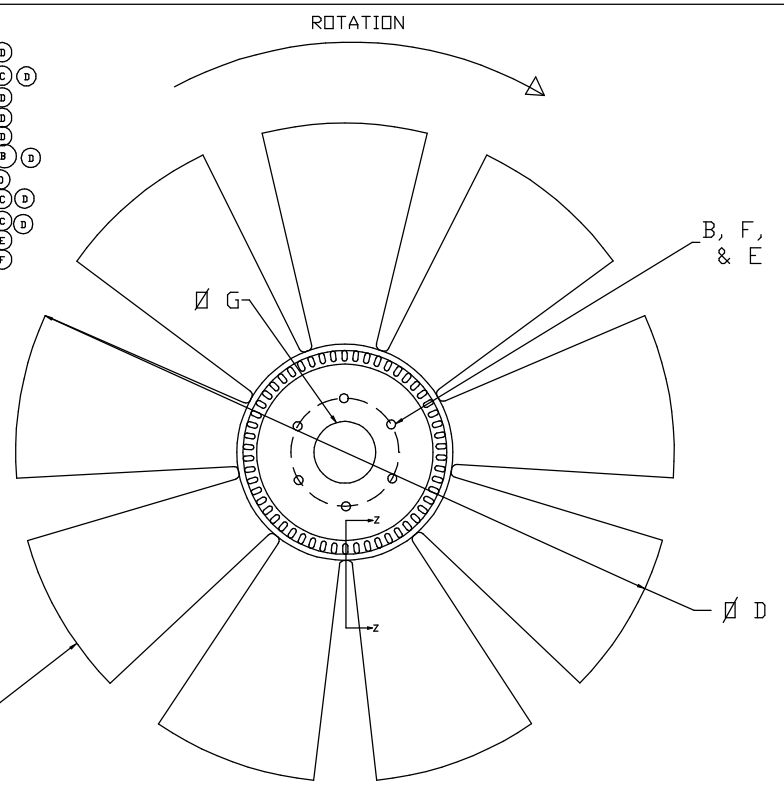


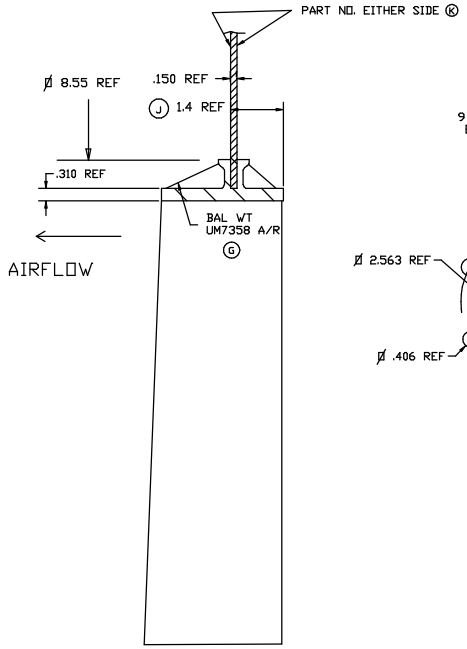


SECTION Z-Z
HALF SIZE

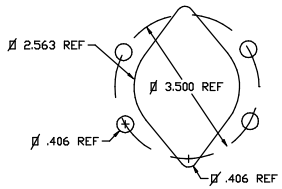


VIEW A

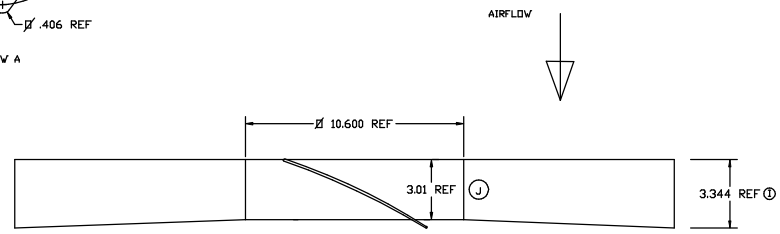


NOTE: BLADES REMOVED FOR CLARITY

| SYM | ECN | REVISION | DK'D | DATE |
|---|---|---|---|---|
| K | 0046 | CORRECT DWG | GFS | 20DEC05 |
| J | 0045 | MODIFY NOTE 3 AND ADD REF DIMS | GFS | 24OCT05 |
| I | 0040 | CORRECT PW | GFS | 30SEP04 |
| H | 0019 | ADD NOTE ON PILOTS | GFS | 19MAR02 |
| G | 0018 | ADD BALANCE WEIGHT P/N TO PRINT | GFS | 20FEB02 |
| F | 0016 | ADD 2.5A PILOT | GFS | 22MAR01 |
| E | 0012 | ADD 4.0 PILOT | GFS | 01SEP00 |
| D | 0009 | COR DWG DIM | GFS | 23MAY00 |
| C | 0006 | CHGD AND ADDED 1.0 PILOT. COR DWG | GFS | 29FEB00 |
| B | 0007 | CHANGED TO 3.002/3.005 PILOT | GFS | 29FEB00 |
| A | 0003 | RELEASED | GFS | 11NOV99 |

AMERICAN COOLING SYSTEMS

PART NAME
FAN ASSEMBLY - 440

| | | | |
|---|---|---|---|
| DRAWN | GFS | | APPROVED |
| DATE | 10MAY99 | SCALE | 1/4 |
| MATERIAL | NOTED | ENGNG | G. SPRINGMAN |
| SHRINK | .05 IN/IN | QC | |
| FINISH | NOTED | MFG | |

THIS DRAWING HAS BEEN PREPARED IN ACCORDANCE WITH ASME Y14.5M-1994

CUSTOMER

CUSTOMER PART NO.

TOL. UNLESS SPECIFIED
.XXX +/- .010
.XX +/- .025
.X +/- .047
∠ +/- 1°

ACS PART NO.
440XXX