ACS PART NUMBER	G PILOT Ø	B REF BOLT CIRCLE Ø	F REF BOLT HOLE Ø	E # HOLES	NOTES	H DISK	PW	
391200	2.000/2.003	3.500	.406	6		10150752004635	3.565+/-.050	
39110X	1.002/1.004	—	—	—		10150751000000	3.565+/-.050	D
391256	2.562/2.565	3.500	.406	6	PILOT PER VIEW A	10150752564635	3.565+/-.050	
391500	5.001/5.004	6.000	.406	6		10150755004660	3.565+/-.050	C
391100	1.002/1.004	1.970 2.360	.343 .406	4 4		101507510034194424	3.565+/-.050	D
391400	4.000/4.003	4.478	.228	8		10150754002845	3.565+/-.050	E
391325	3.250/3.253	3.810	.406	4		10150753254438	3.565+/-.050	F
39125A	2.562/2.565	3.500	.406	6		10150752544635	3.565+/-.050	G

SEE PILOT LISTING P/N 999999 FOR ADDITIONAL PILOTS (I)

NOTES:
1. MATERIAL: B3WG6 OR PA6GF30
NYLON 6 GLASS FILLED 30%
(B) 2. BALANCE TO .4 OZ/IN. BALANCE TO BE ACHIEVED BY MATERIAL REMOVAL AT BLADE TIP UP TO .3 INCHES ON 4 BLADES OR BY ADDITION OF BALANCE WEIGHTS ON HUB RIBS.
(J) 3. A DASH NUMBER WILL BE INCLUDED DESIGNATING FAN DIAMETER (ØD).
EX. 391500-32 (INCHES)
OR 391500-813 (MM).
THE MAX REFEERENCE FAN DIA IS 32 INCHES.
THE DIA TOLERANCE ON MOLDED FAN DIAMETERS IS +.150/-.236.
THE DIA TOLERANCE ON CUT DIAMETERS IS +0/-.236.
4. PW IS DEFINED AS THE MAXIMUM MEASUREMENT FRONT TO BACK.

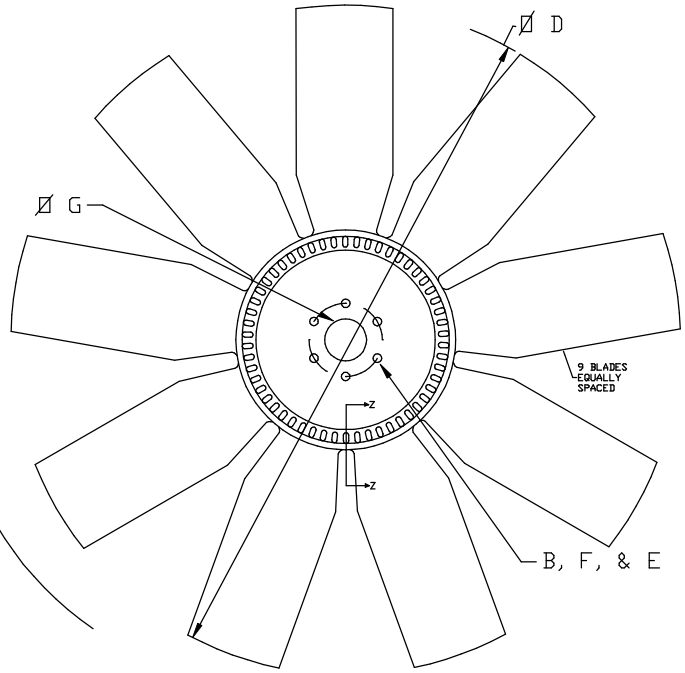

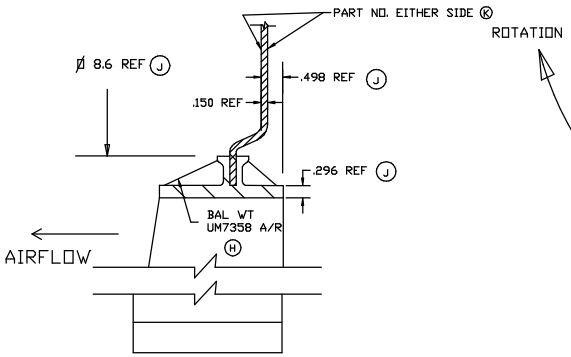

SECTION Z-Z
HALF SIZE

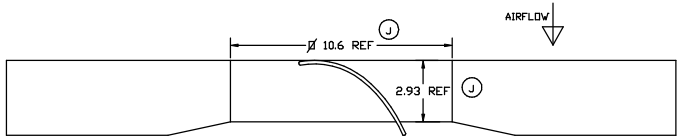

NOTE: BLADES REMOVED FOR CLARITY

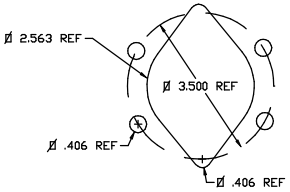

VIEW A

SYM	ECN	REVISION	DK'D	DATE
K	0046	CORRECT DWG	GFS	20DEC05
J	0045	MODIFY NOTE 3 AND ADD REF DIMS.	GFS	24OCT05
I	0019	ADD NOTE ON PILOTS	GFS	19MAR02
H	0018	ADD BALANCE WEIGHT P/N TO PRINT	GFS	20FEB02
G	0016	ADD 2.5A PILOT	GFS	22MAR01
F	0015	ADD 3.25 PILOT	GFS	15MAR01
E	0012	ADD 4.0 PILOT	GFS	01SEP00
D	0006	CHGD AND ADDED 1.0 PILOT, CDR DWG	GFS	29FEB00
C	00001	REDRAWN IN AUTOCAD, CDR DISK P/N	GFS	04APR99
B	1474	REV NOTE 2 TO INCLUDE BAL WEIGHTS	RDB	29MAY98
A	-	RELEASED	TD	06FEB98

AMERICAN COOLING SYSTEMS

PART NAME
FAN ASSEMBLY - 391

DRAWN	RDB		APPROVED
DATE	23SEP97	SCALE	1/4
MATERIAL	NOTED	ENG'NG	G. SPRINGMAN
SHRINK	.05 IN/IN	QC	
FINISH	NOTED	MFG	

THIS DRAWING HAS BEEN PREPARED IN ACCORDANCE WITH ASME Y14.5M-1994

CUSTOMER

CUSTOMER PART NO.

TOL. UNLESS SPECIFIED
.XXX +/- .010
.XX +/- .030
.X +/- .027
∠ +/- 1°

ACS PART NO. 391XXX