ACS PART NUMBER	G PILOT ø	B REF BOLT CIRCLE ø	F REF BOLT HOLE ø	E # HOLES	NOTES	H DISK	PW (E)
217200	2.000/2.003	3.500	.406	6		10150752004635	5.127 MAX
21710X	1.002/1.004	—	—	—		10150751000000	5.127 MAX (C)
217256	2.562/2.565	3.500	.406	6	PILOT PER VIEW A	10150752564635	5.127 MAX
217500	5.001/5.004	6.000	.406	6		10150755004660	5.127 MAX
217369	3.687/3.690	4.630	.406	6		10150753694646	5.127 MAX
217300	3.002/3.005	5.250	.433	6		10150753004652	5.127 MAX (B)
217325	3.250/3.253	3.810	.406	4		10150753254438	5.127 MAX
217100	1.002/1.004	1.970 2.360	.343 .406	4 4		101507510034194424	5.127 MAX (C)
217400	4.000/4.003	4.478	.228	8		10150754002845	5.127 MAX (D)

SEE PILOT LISTING P/N 999999 FOR ADDITIONAL PILOTS (G)

NOTES:
1. MATERIAL: B3WG6 OR PA6GF30 NYLON 6 GLASS FILLED 30%
2. BALANCE TO .4 OZ/IN. BALANCE TO BE ACHIEVED BY MATERIAL REMOVAL AT BLADE TIP UP TO .3 INCHES ON 4 BLADES OR BY ADDITION OF BALANCE WEIGHTS ON HUB RIBS.
(H) 3. A DASH NUMBER WILL BE INCLUDED DESIGNATING FAN DIAMETER (ØD). EX. 217500-38 (INCHES) OR 217500-965 (MM).
(K) THE MAX REFEERENCE FAN DIA IS 40 INCHES. THE DIA TOLERANCE ON MOLDED FAN DIAMETERS IS +.150/-.236. THE DIA TOLERANCE ON CUT DIAMETERS IS +0/-.236.
(J) THE MAXIMUM CUT DIA IS 1005 MM (39.6 IN). BEYOND 1005 THE FAN DIAMETER IS THE AS MOLDED DIAMETER OF 40 INCHES (1016 MM).
4. PW IS DEFINED AS THE MAXIMUM MEASUREMENT FRONT TO BACK.

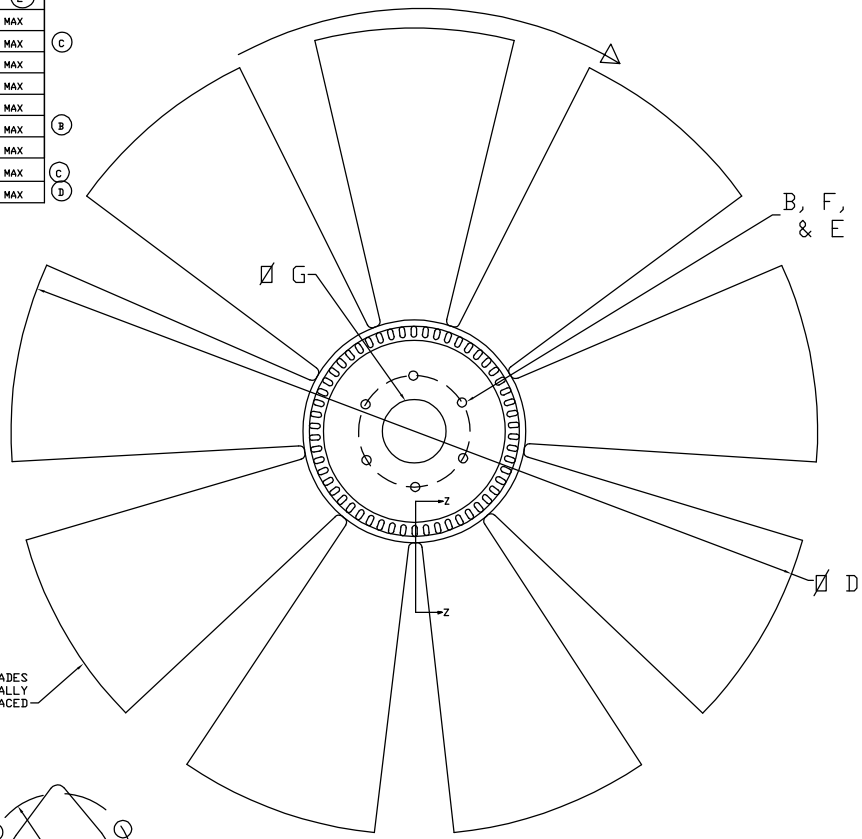

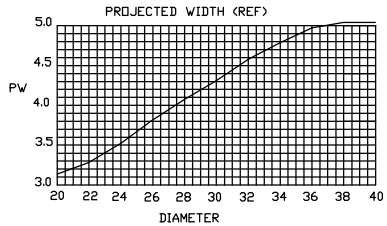

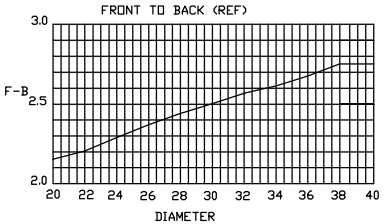

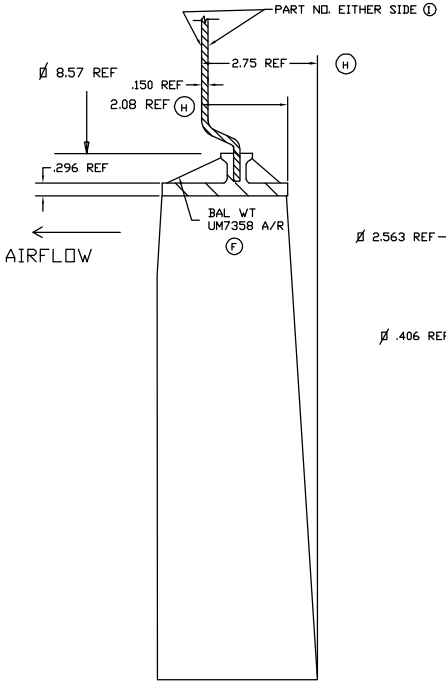

SECTION Z-Z
HALF SIZE

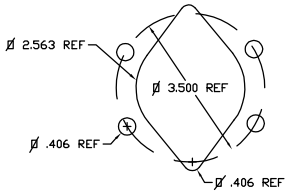

VIEW A

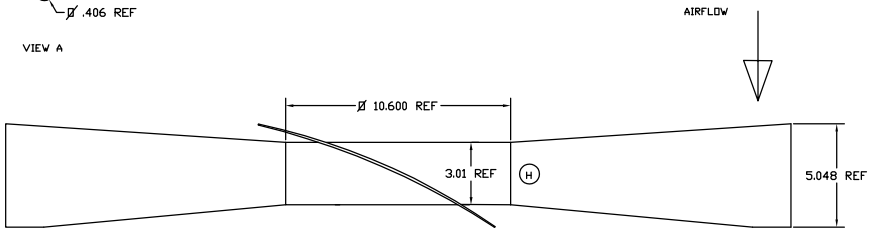

NOTE: BLADES REMOVED FOR CLARITY

SYM	ECN	REVISION	DK'D	DATE
K	0088	INCREASE DIAMETER TO 40 INCHES	GFS	16AUG17
J	0084	ADD DIM CLARIFICATION TO NOTE 4	GFS	23NOV16
I	0046	CORRECT DWG	GFS	20DEC05
H	0045	MODIFY NOTE 3 AND ADD REF DIMS.	GFS	24OCT05
G	0019	ADD NOTE ON PILOTS	GFS	19MAR02
F	0018	ADD BALANCE WEIGHT P/N TO PRINT	GFS	20FEB02
E	0017	CHG PW TO MAX DIM	GFS	06DEC01
D	0012	ADD 4.0 PILOT	GFS	01SEP00
C	0006	CHGD AND ADDED 1.0 PILOT, CDR DWG	GFS	29FEB00
B	0007	CHANGED TO 3.002/3.005 PILOT	GFS	29FEB00
A	0003	RELEASED	GFS	11NOV99

AMERICAN COOLING SYSTEMS

PART NAME
FAN ASSEMBLY - 217

DRAWN	GFS		APPROVED
DATE	10MAY99	SCALE	1/4
MATERIAL	NOTED	ENGRNG	G. SPRINGMAN
SHRINK	.05 IN/IN	QC	
FINISH	NOTED	MFG	

THIS DRAWING HAS BEEN PREPARED IN ACCORDANCE WITH ASME Y14.5M-1994

TOL UNLESS SPECIFIED
.XXX +/- 0.03
.XX +/- 0.05
.X +/- 0.07
∠ +/- 1°

CUSTOMER

CUSTOMER PART NO.

ACS PART NO.
217XXX